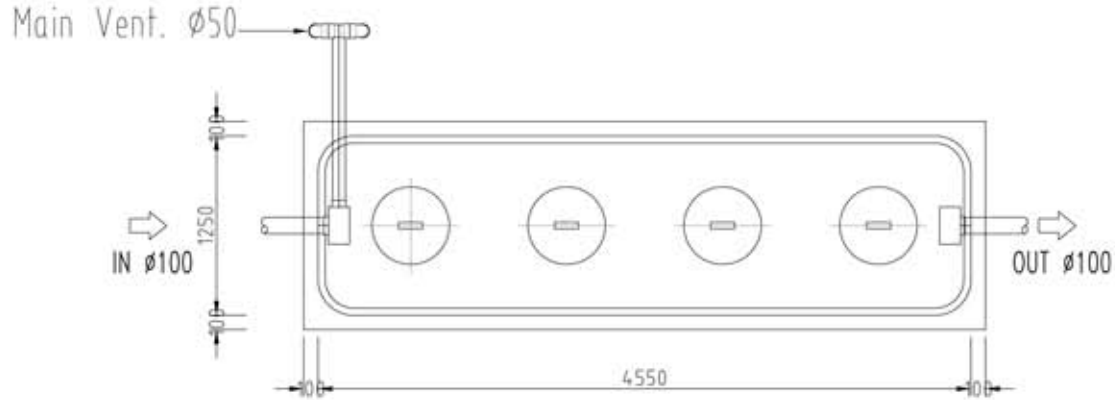

PLAN VIEW

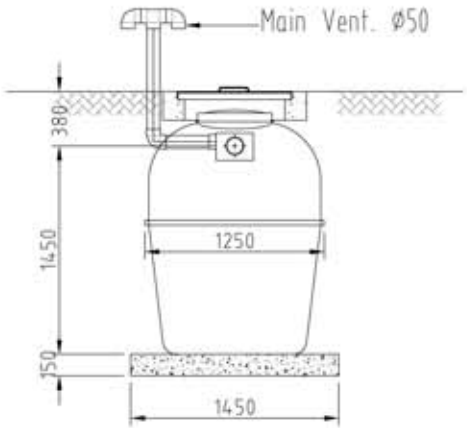

LEFT SIDE VIEW

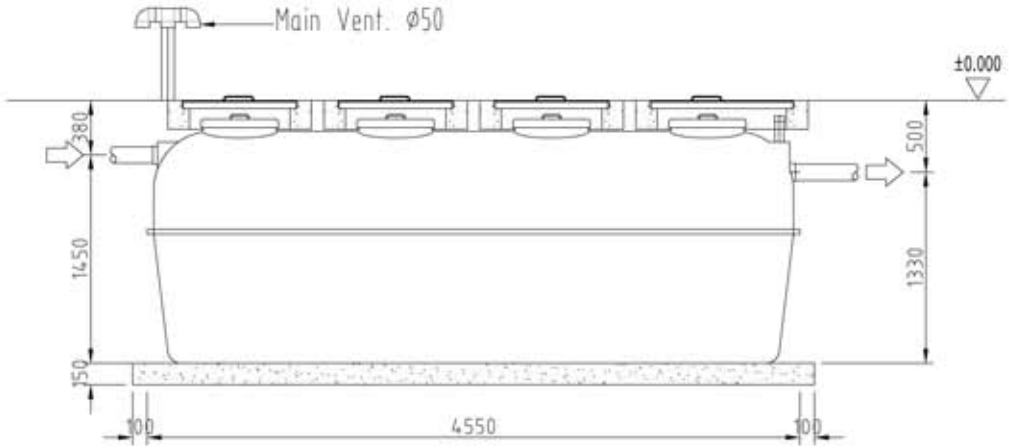

FRONT VIEW

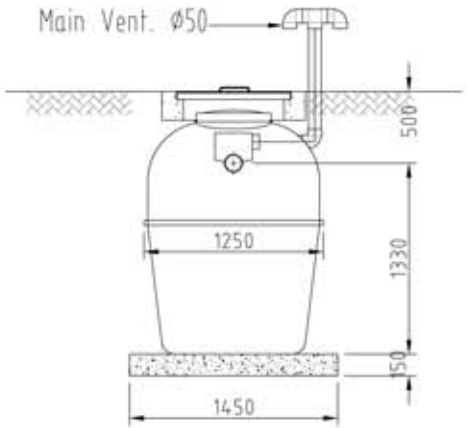

RIGHT SIDE VIEW

REV	DESCRIPTION	DRAWN	CHK'D	APPV'D	DATE

REF.DWG.: REV. △

WE SERVE AND ENSURE OUR CLIENT WITH THE BEST QUALITY PRODUCT

TITLE : R C – 11

DRAWN	DESIGNER	APPV'D	△
DATE	DATE	DATE	REV
JOB No : 09BMF12	DWG No :		SHT: 1 of 2